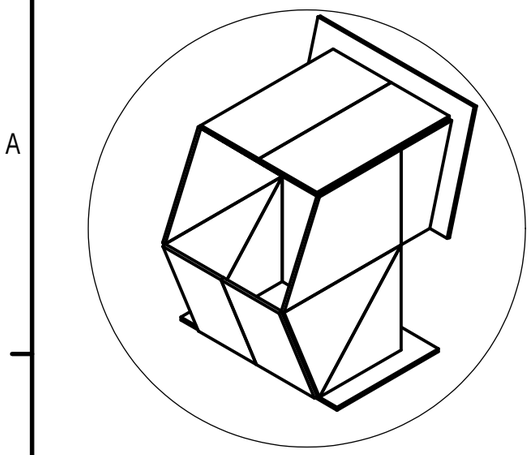

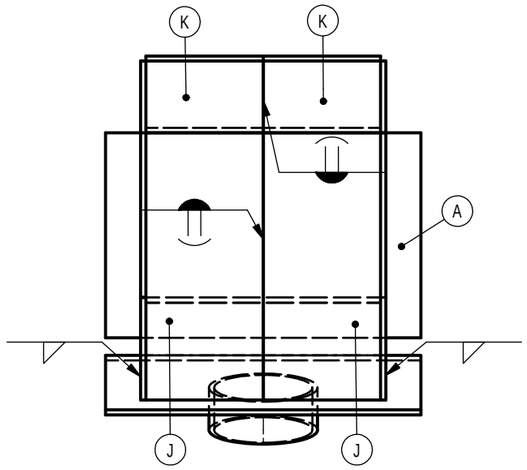

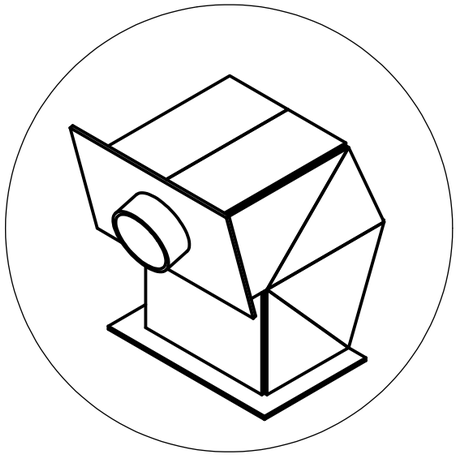

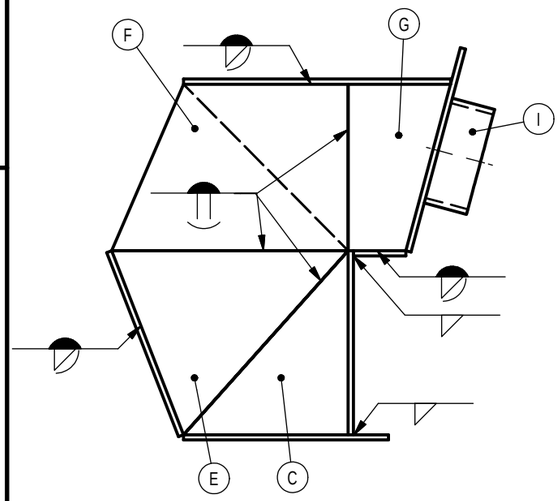

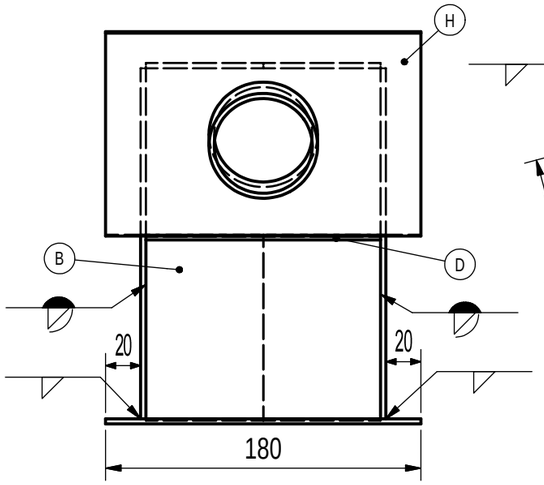

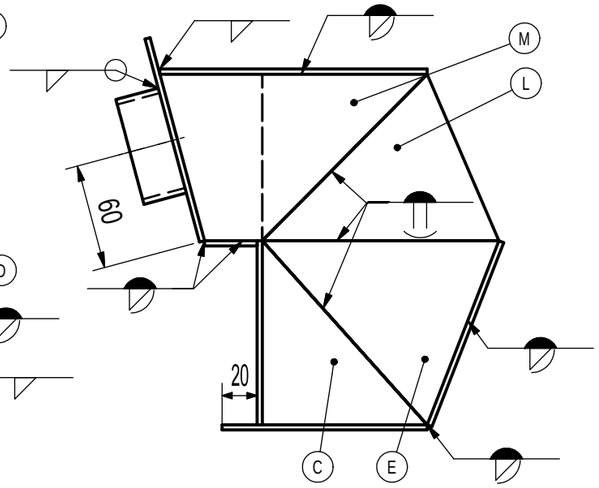

Item.	Q'ty	Descriptions
A	1	180X117X3.0, AA 5052 ALUMINIUM SHEET
B	1	134X105X3.0, AA 5052 ALUMINIUM SHEET
C	2	105X94X3.0, AA 5052 ALUMINIUM SHEET, TRIANGLE, AS PER SKETCH
D	1	134X30X3.0, AA 5052 ALUMINIUM SHEET
E	2	95X105X3.0, AA 5052 ALUMINIUM SHEET, TRIANGLE, AS PER SKETCH
F	1	135X95X94X3.0, AA 5052 ALUMINIUM SHEET, TRAPEZOID, AS PER SKETCH
G	1	58X95X33X3.0, AA 5052 ALUMINIUM SHEET,TRAPEZOID, AS PER SKETCH
H	1	180X120X3.0, AA 5052 ALUMINIUM SHEET
I	1	OD 62X25X3.0, AA 5052 ALUMINIUM PIPE
J	2	152.5X67X3.0, AA 5052 ALUMINIUM SHEET
K	2	112.7X67X3.0, AA 5052 ALUMINIUM SHEET
L	1	135X95X3.0, AA 5052 ALUMINIUM SHEET, TRIANGLE, AS PER SKETCH
M	1	152.5X95X25.5X3.0, AA 5052 ALUMINIUM SHEET,TRAPEZOID, AS PER SKETCH

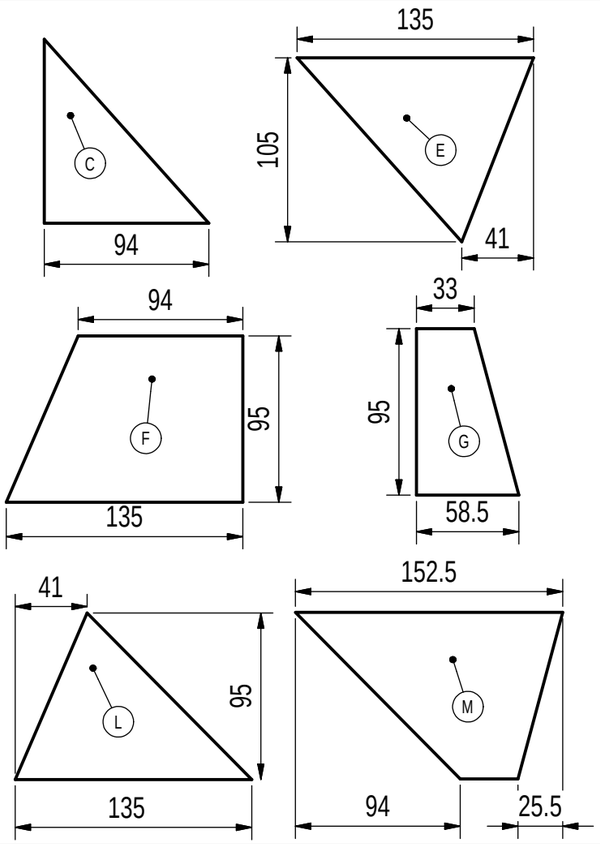

INSTRUCTIONS TO COMPETITORS

1. WELDING PROCESS:ISO 4063-141 (AWS A3.0 GTAW)
2. WELDING POSITIONS: ALL EXCEPT VERTICAL DOWN.
3. NO GAPS ARE ALLOWED ON THE BUTT & CORNER WELD JOINTS.
4. ALL BUTT & CORNER WELDS SHALL HAVE FULL PENETRATIONS.
5. ALL THE WELDING TO BE CARRIED OUT WITH BASE PLATE "A" IN THE FLAT POSITION.
6. ALL LEG SIZES OF FILLET WELDS: 4.0 mm WITH TOLERANCE (+2.0 mm/-0.0 mm).
7. OUTSIDE CORNER WELD RADII TO BE JUDGEMENT ASSESSED WITH GRADE (0,1,2,3).
8. ALL WELDS SHALL BE COMPLETED IN ONLY ONE PASS WITH FILLER ROD ADDED.

NOTE: ALL DIMENSTIONS IN MILLIMETRE

Module 3
Provincial Skills Canada Competition
Post-Secondary Welding

SkillsCanada Alberta

Skill: 10. 焊接, Welding, Schweissen, Soudage			OR
Scale: N. T. S	Date: 17. June. 2020	Paper: A3	
Drawn/Designed by: Chih-Peng Chen TW/ Liu Jingfeng CN			Drawing No:WSC2021_TP10_CN_AL_ASSEMBLY_ISO A
Description: Aluminium-Assembly			Rev: 1 / Page:
			Appd: / Sign:

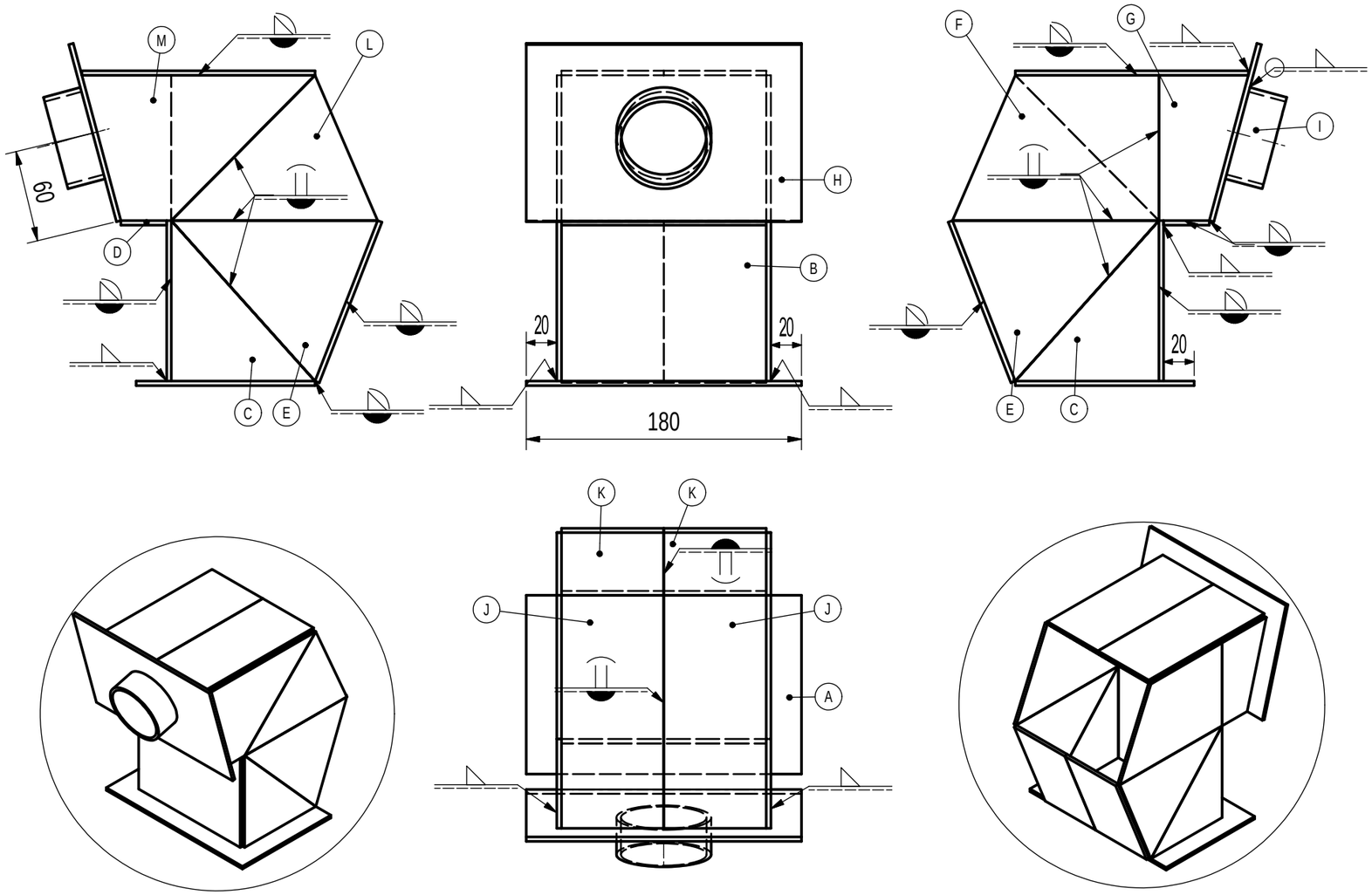

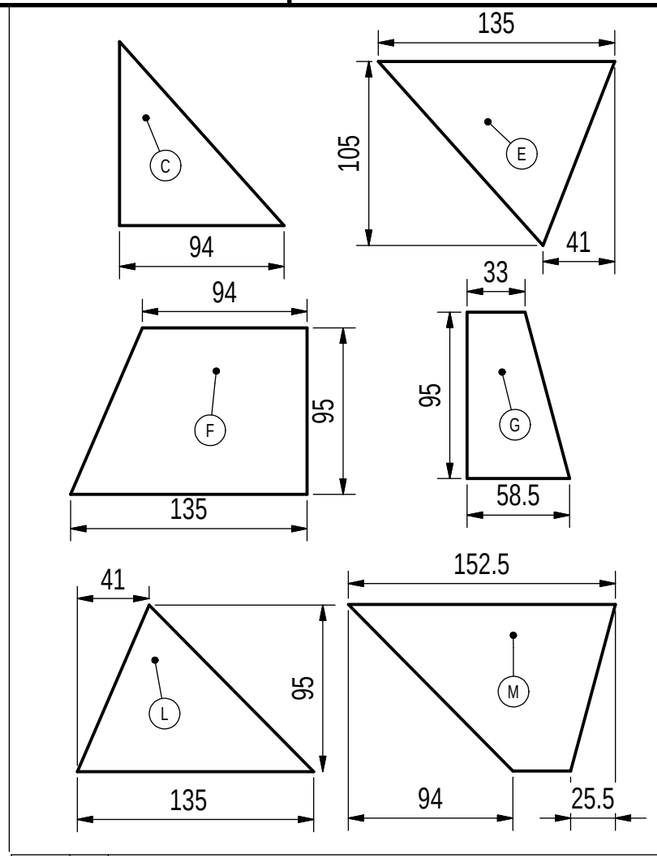

Item.	Q'ty	Descriptions
M	1	152.5X95X25.5X3.0, AA 5052 ALUMINIUM SHEET,TRAPEZOID, AS PER SKETCH
L	1	135X95X3.0, AA 5052 ALUMINIUM SHEET, TRIANGLE, AS PER SKETCH
K	2	112.7X67X3.0, AA 5052 ALUMINIUM SHEET
J	2	152.5X67X3.0, AA 5052 ALUMINIUM SHEET
I	1	OD 62X25X3.0, AA 5052 ALUMINIUM PIPE
H	1	180X120X3.0, AA 5052 ALUMINIUM SHEET
G	1	58X95X33X3.0, AA 5052 ALUMINIUM SHEET,TRAPEZOID, AS PER SKETCH
F	1	135X95X94X3.0, AA 5052 ALUMINIUM SHEET, TRAPEZOID, AS PER SKETCH
E	2	95X105X3.0, AA 5052 ALUMINIUM SHEET, TRIANGLE, AS PER SKETCH
D	1	134X30X3.0, AA 5052 ALUMINIUM SHEET
C	2	105X94X3.0, AA 5052 ALUMINIUM SHEET, TRIANGLE, AS PER SKETCH
B	1	134X105X3.0, AA 5052 ALUMINIUM SHEET
A	1	180X117X3.0, AA 5052 ALUMINIUM SHEET

INSTRUCTIONS TO COMPETITORS

1. WELDING PROCESS:ISO 4063-141 (AWS A3.0 GTAW)
2. WELDING POSITIONS: ALL EXCEPT VERTICAL DOWN.
3. NO GAPS ARE ALLOWED ON THE BUTT & CORNER WELD JOINTS.
4. ALL BUTT & CORNER WELDS SHALL HAVE FULL PENETRATIONS.
5. ALL THE WELDING TO BE CARRIED OUT WITH BASE PLATE "A" IN THE FLAT POSITION.
6. ALL LEG SIZES OF FILLET WELDS: 4.0 mm WITH TOLERANCE (+2.0 mm/-0.0 mm).
7. OUTSIDE CORNER WELD RADII TO BE JUDGEMENT ASSESSED WITH GRADE (0,1,2,3).
8. ALL WELDS SHALL BE COMPLETED IN ONLY ONE PASS WITH FILLER ROD ADDED.

NOTE: ALL DIMENSTIONS IN MILLIMETRE

Module 3
Provincial Skills Canada Competition
Post-Secondary Welding

SkillsCanada Alberta

Skill: 10. 焊接, Welding, Schweissen, Soudage		OR
Scale: N. T. S	Date: 17. June. 2020	Paper: A3
Drawn/Designed by: Chih-Peng Chen TW/ Liu Jingfeng CN		Drawing No:WSC2021_TP10_CN_AL_ASSEMBLY_ISO E
Description: Aluminium-Assembly		Rev: 1 / Page:
		Appd: / Sign: